Aquaculture Reports 50 (2026) 103776



Contents lists available at ScienceDirect

Aquaculture Reports

journal homepage: www.elsevier.com/locate/aqrep



# A new type of hybrid bream derived from a hybrid of *Megalobrama amblycephala* (♀) × *Xenocypris davidi* (♂)

Siyu Fan [a,b,c,1], Yujie Huang [a,b,1], Xin Chen [a,b,1], Bin Wu [a,b], Zhifeng Zhou [a,b], Zhong Tang [a,b], Xinxin Yu [a,b], Faxian Yu [a,b], Min Tao [a,b,*], Ming Ma [c,**], Shaojun Liu [a,b,*]

[a] *Engineering Research Center of Polyploid Fish Reproduction and Breeding of the State Education Ministry, College of Life Sciences, Hunan Normal University, Changsha 410081, China*

[b] *Yuelushan Laboratory, Changsha 410128, China*

[c] *Key Laboratory of Chemical Biology and Traditional Chinese Medicine Research (Ministry of Education), College of Chemistry and Chemical Engineering, Hunan Normal University, Changsha 410081, China*

ARTICLE INFO

*Keywords:*
Distant hybridization
Backcross
*Megalobrama amblycephala*
Molecular markers
Mitochondrial inheritance

ABSTRACT

Blunt snout bream (*Megalobrama amblycephala*, BSB, 2 n = 48) is an endemic and economically important freshwater fish in China, characterized by its ease of culture, rapid growth, and high meat quality. However, the industry faces challenges such as germplasm degradation and a lack of new genetic resources. Distant hybridization, which integrates genetic material from different species and alters offspring genotypes and phenotypes, represents a powerful tool for genetic breeding. In this study, we successfully generated backcross progeny by crossing female BSB with $F_1$ hybrids (BY) derived from the distant hybridization of BSB (♀) × Yellowtail (*Xenocypris davidi*, YT, 2 n = 48, ♂). Two types of offspring were obtained: diploid (2nBBY, 2 n = 48) and triploid (3nBBY, 3 n = 72). DNA content, chromosome number, morphological traits, and gonad development of these backcross progeny were comprehensively characterized. Morphologically, 2nBBY resembled the maternal BSB but exhibited a significantly higher body depth and smaller head than the maternal BSB ($P < 0.05$). The 3nBBY displayed an intermediate morphology between BSB and BY, with a body depth greater than that of the paternal BY hybrids ($P < 0.05$). Growth-related results further showed that both 2nBBY and 3nBBY had significantly higher body weights and lower coefficients of variation than the parental and $F_1$ hybrid groups. These morphological traits suggest that the backcross progeny have promising potential for BSB genetic improvement. Gonadal histological analysis revealed that 2nBBY included both females and males with normal gonad development, whereas only males with retarded gonadal development were found among 3nBBY. Preliminary studies on the genetics and variation of the backcross progeny using three molecular markers (5S rDNA, Sox-HMG box, and the complete mitochondrial genome) indicated that both backcross types inherited genetic material from both BSB and YT. Notably, sequence alignments of 5S rDNA and *Sox9* revealed various insertions, substitutions, and deletions, suggesting novel genetic recombination and variation in the backcross progeny. These newly developed backcross progeny not only provide valuable germplasm resources for BSB genetic improvement but also offer essential insights into the genetic mechanisms underlying distant hybridization in fish.

## 1. Introduction

Distant hybridization, involving crosses between different species, genera, families, or even orders, can integrate genetic material from distinct parents, leading to significant alterations in the genotype and phenotype of the offspring (Liu et al., 2016, 2018). This serves as a crucial method for rapid germplasm enhancement and the creation of new varieties in aquaculture (Liu, 2010).

* Corresponding authors at: Engineering Research Center of Polyploid Fish Reproduction and Breeding of the State Education Ministry, College of Life Sciences, Hunan Normal University, Changsha 410081, China.

** Corresponding author.

*E-mail addresses:* minmindiu@126.com (M. Tao), mingma@hunnu.edu.cn (M. Ma), lsj@hunnu.edu.cn (S. Liu).

[1] These authors contributed equally to this work.

https://doi.org/10.1016/j.aqrep.2026.103776

Available online 4 August 2026

2352-5134/© 2026 The Authors. Published by Elsevier B.V. This is an open access article under the CC BY-NC-ND license (http://creativecommons.org/licenses/by-nc-nd/4.0/).

Extensive research on fish distant hybridization has been conducted across numerous families within the orders Cypriniformes, Perciformes, and Siluriformes (Lou and Li, 2006). Successful hybridizations, such as those among the four major Chinese carps and within the genus *Oreochromis*, have yielded viable hybrid offspring (Gharib, 1998; Kolar and Chapman, 2005; Lamer and Dolan, 2010; Wang and Gaughan, 2019a; Zhang and Chen, 2014). The primary goal of distant hybridization breeding is to develop progeny with superior traits, including desirable economic characteristics (e.g., fast growth, high nutritional value, excellent meat quality, and enhanced disease resistance) and favorable ornamental features (e.g., body color and morphology), thereby establishing stable and heritable germplasm resources. However, $F_1$ hybrids from distant hybridization often face challenges such as impaired fertility. Overcoming the reproductive barriers in the $F_1$ generation is essential for effectively establishing populations or lines with stable genetic advantages, which can serve as foundational resources for subsequent breeding programs (Liu, 2010).

Previous researchers worldwide have established many fertile offspring and lines through distant hybridization. Lilyestrom et al. conducted hybridization studies between two catfish species (*Ictalurus punctatus* and *I. furcatus*), obtaining diploid and triploid hybrid offspring. The diploid progeny exhibited normal gonad development, while the triploid progeny was sterile (Lilyestrom et al., 1999). Luin et al. hybridized *Epinephelus fuscoguttatus* (♀) with *E. lanceolatus* (♂), producing hybrid offspring with normal gonad development (Luin et al., 2013). Guo et al. obtained $F_1$ hybrids from the cross between *Larimichthys crocea* (♀) and *L. polyactis* (♂), which displayed normal ovarian and testicular development, indicating fertile progeny (Guo et al., 2022). Chen et al. reported that hybrid groupers derived from *E. fuscoguttatus* (♀) × *E. tukula* (♂) exhibited normal fertility (Chen et al., 2023). Huang et al. obtained both diploid and triploid individuals from the hybridization of *E. coioides* (♀) × *E. lanceolatus* (♂), where the triploids were sterile, but the diploids had normal gonad development (Huang et al., 2016; Xiao et al., 2019). Hybrid offspring from the cross between *E. fuscoguttatus* (♀) and *E. lanceolatus* (♂) were fertile, and their gametes could be fertilized normally (Yang et al., 2021). Zhong et al. produced hybrid offspring by crossing *Micropterus salmoides* (♀) with *Lepomis cyanellus* (♂) (Zhong et al., 2024). Hybrids from *Takifugu obscurus* (♀) × *T. rubripes* (♂) have shown growth advantages, though their gonad development requires further study (Gao et al., 2021). These examples illustrate the feasibility of distant hybridization in fish genetic improvement.

Molecular markers are indispensable tools for analyzing the genetic outcomes of hybridization. In eukaryotes, 5S rDNA consists of a 120-base pair (bp) conserved sequence (responsible for transcribing 5S rRNA) and several highly variable non-transcribed spacer (NTS) regions, arranged in tandem repeats. The conserved region is relatively stable, whereas the NTS sequences can vary even between closely related species, making them a characteristic marker for species identification. Numerous studies on 5S rDNA have been reported in both lower invertebrates (e.g., *Drosophila*) and higher vertebrates (e.g., mammals) (Nazar et al., 1976; Paques et al., 1995). Many researchers use the NTS sequence of 5S rDNA as a reliable molecular marker to identify different species. For instance, Moran et al. designed specific 5S rDNA primers for Salmonidae and successfully distinguished two different salmon species and their hybrids at the molecular level (Moran and Pendas, 1995). Wang et al. used 5S rDNA markers and FISH technology to identify the genotypes of hybrid offspring, providing strong evidence for the distant hybrid origin of crucian carp (*Carassius auratus*) (Wang et al., 2017). Thus, 5S rDNA can serve as a molecular marker for studying fish genetic characteristics.

The Sox gene, an acronym for Sry-related HMG box, refers to a family of transcription factor (TF) encoding genes that bind to the minor groove of the DNA double helix. It belongs to a gene superfamily whose members all contain a highly conserved HMG (high mobility group) box characteristic sequence (Gubbay et al., 1990; Sinclair et al., 1990; Foster and Graves, 1994; Bowles et al., 2000). The HMG box is a highly conserved DNA-binding domain found widely in eukaryotes, including nematodes, insects, amphibians, reptiles, and many mammals (Laudet et al., 1993; Grosschedl et al., 1994). Chen et al. developed primers targeting the HMG box of Sox genes, which can amplify Sox-HMG fragments from dozens of animals, including insects, amphibians, reptiles, and fish. Furthermore, aided by high-throughput sequencing technologies, numerous genes belonging to the Sox family have been reported in various fish over the past decade, establishing Sox-HMG as a molecular marker widely used in fish molecular genetics research (Chen et al., 2009).

Mitochondria are important organelles in biological cells, containing their own DNA (mtDNA), which is independent of nuclear DNA and capable of self-replication, transcription, and translation, known as an extranuclear genetic factor (Boore, 1999). Fish mitochondrial DNA is a covalently closed circular double-stranded DNA molecule, comprising L-strand (light) and H-strand (heavy). It consists of 22 tRNAs (transfer RNA), two rRNAs (ribosomal RNA), a D-Loop region (control region), 13 protein-coding regions, and an origin of replication. Fish mitochondrial DNA has the following characteristics: small molecular weight, approximately 15.5–25 kb; few non-coding regions, with gene coding sequences tightly arranged; high copy number, with 1–10 thousand copies per cell; high mutation rate and rapid evolution, coupled with a lack of efficient repair mechanisms. Fish mitochondrial DNA can be used for evolutionary and origin studies. For example, Vergara-Chen et al. used mitochondrial DNA sequencing to analyze the phylogeny of several species in the genus *Cynoscion* (Vergara-Chen et al., 2009). Saad et al. used 16S rRNA genes to develop DNA barcoding and species identification among some Serranidae fishes (Saad, 2019). Additionally, due to its conservatism, mitochondrial DNA is also used as a molecular marker for identifying specific individuals (Zhou et al., 2005).

Blunt snout bream (*Megalobrama amblycephala*, BSB, 2 n = 48), belonging to the subfamily Cultrinae, family Cyprinidae, is a high-quality aquaculture species known for its herbivorous diet, fast growth, and tender flesh. However, it currently faces challenges like germplasm degradation and inadequate development of new germplasm. The yellowtail (*Xenocypris davidi*, YT, 2 n = 48), belonging to the subfamily Xenocyprinae, family Cyprinidae, is an omnivorous fish with firm flesh. In our previous work, $F_1$ hybrids (BY) were successfully generated from the distant hybridization of BSB (♀) × YT (♂) (Hu et al., 2012). These hybrids carry genetic information from both parental species and have been reported to exhibit heterosis in growth rate and flesh yield; however, they show poor fertility. Backcrossing female BSB with male BY hybrids may help recover favorable BSB-related aquaculture traits while retaining partial YT-derived genetic components, thereby creating new germplasm resources with improved morphological traits and potential breeding value. Therefore, the present study aimed to generate backcross progeny from BSB (♀) × BY (♂), characterize their ploidy, morphology, gonadal development, and molecular inheritance patterns, and preliminarily explore the mechanisms underlying their heterosis.

## 2. Materials and methods

### 2.1. Source of experimental fish and standardization of experimental materials

The original broodstock of BSB and YT used for breeding experiments were obtained from Hunan Fish Genetics and Breeding Center (Changsha, Hunan, China). All parent fish and resulting hybrid progeny were reared in ponds at the laboratory's breeding base. Animal experiment personnel were certified through professional training courses for laboratory animal practitioners by the Hunan Association for Laboratory Animal Science. Fish handling complied with regulations from the Chinese Bureau of Science and Technology for laboratory animal management and adhered to the "Wildlife Protection Regulations".

### 2.2. Parent selection and artificial induced spawning

Parent selection was conducted before the breeding season of BSB (April to May each year). Individuals over two years old, with well-proportioned body shape, robust constitution, active status, and free from disease or injury, were chosen. Female BSB weighed over 500 g, and male YT weighed over 300 g. They were carefully reared in ponds to ensure gonad development. The experimental fish were produced through two steps: distant hybridization and backcrossing.

The first step involved the production of the $F_1$ hybrid (BY) population. During the breeding seasons of 2020 and 2021, when water temperature stabilized above 20 ℃, breeding work was performed. BY hybrids originated from the distant hybridization of female BSB × male YT. Ten females of BSB and ten males of YT were selected for artificial induced spawning, with a female-to-male ratio of 1:1. Hormones used for induction were Chorionic Gonadotropin (HCG), Luteinizing Hormone Releasing Hormone $A_2$ (LRH-$A_2$), and Domperidone (DOM) injection, produced by the Ningbo Second Hormone Factory. Injection doses were adjusted based on broodstock weight. The formula for female BSB was HCG 600 IU/kg + LRH-$A_2$ 8 μg/kg + DOM 2 mg/kg. The formula for male YT was HCG 400 IU/kg + LRH-$A_2$ 4 μg/kg. After injection, the broodstock were placed in spawning ponds. The time to spawning (effect time) was approximately 9–11 h at 20–24 ℃ and about 8 h at 25 ℃. When broodfish showed courtship behavior and spawning, they were promptly captured for artificial dry fertilization. Fertilized eggs were hatched in circulating water incubation troughs. The resulting fry, the $F_1$ BY hybrids, were transferred to nursery ponds after reaching the swim-up stage. Nursery ponds measured 2 m × 3 m with a water depth of 1.5 m. Before stocking, ponds were fertilized with fresh soybean milk and a small amount of fermented farm manure to cultivate rich algae and natural feed like cladocerans and copepods. After stocking, fry was fed Artemia nauplii and egg yolk three times daily. Once fry grew beyond 2 cm, they were separated for intensive culture.

After rearing the $F_1$ BY hybrids for three years, the second step of production of backcross progeny was conducted. During the breeding seasons of 2023 and 2024, when water temperature stabilized above 20 ℃, breeding work began. Ten female BSB and thirty male BY hybrids were selected for artificial induced spawning, with a female-to-male ratio of 1:3. The hormones used were the same as in the first step. The injection formula for female BSB was HCG 600 IU/kg + LRH-$A_2$ 8 μg/kg + DOM 2 mg/kg. The formula for male BY hybrids was HCG 500 IU/kg + LRH-$A_2$ 5 μg/kg, without DOM. Artificial dry fertilization was used. Methods for incubating fertilized eggs and rearing fry were the same as in the first step.

For each experimental batch, 2000 eggs were sampled to calculate the fertilization rate (number of embryos at gastrula stage / total number of eggs × 100%) and hatching rate (total number of fry / total number of eggs × 100%).

### 2.3. Morphological measurement of backcross progeny

After 12 months of careful rearing, fish were netted to examine the growth of the backcross progeny. Thirty healthy individuals were randomly selected for morphological analysis. Countable traits included the number of dorsal fins, abdominal fins, anal fins, lateral line scales, scales above the lateral line, and scales below the lateral line. Measurable traits included body length (BL), body height (BH), head length (HL), head height (HH), caudal peduncle length (CPL), and caudal peduncle height (CPH). Body weight (BW) was also recorded. The ratios of total length (TL) to BL, BL to HL, BL to BH, HL to HH, BH to HH, and CPL to CPH were further calculated. Measurement methods referred to Chinese standards for germplasm inspection of cultured fish (Zou et al., 2008). SPSS 27 (IBM SPSS Statistics 27.0.1) was used to calculate the mean and standard deviation for different datasets. After normality and homogeneity of variance tests, data were subjected to one-way analysis of variance (ANOVA). If variances were homogeneous, the LSD and Waller-Duncan methods were used; if not, Tamhane's T2 method was applied, with the significance level set at 0.05 (Kirkpatrick and Feeney, 2011). Data are presented as mean ± standard deviation. The coefficient of variation was calculated as CV (%) = standard deviation / mean × 100%.

### 2.4. Analysis of DNA content, chromosomes, and gonadal development in backcross progeny

Ten backcross progeny were randomly selected, and a small amount of blood was collected from the caudal vein using a small amount of acid citrate dextrose (ACD) as an anticoagulant. The blood sample processing procedure followed a previous report (Liu et al., 2007). DNA content was determined using a flow cytometer (Partec PA).

Three backcross progeny were selected for kidney chromosome preparation. The anatomical sampling, treatment, and hypotonic treatment steps for chromosome preparation followed a previously described method (Wang et al., 2018). Two hundred metaphase spreads were randomly selected under a microscope to analyze chromosome morphology and number.

After 12 months of rearing, experimental fish were anesthetized with MS−222, sacrificed promptly, and their gonads were dissected and fixed in Bouin's solution. Paraffin sectioning and HE staining techniques were used to observe the gonadal development of the backcross progeny. Specific experimental steps, including tissue dehydration, paraffin embedding, sectioning, dewaxing, and staining, were performed as described in previous reports (Xiao et al., 2014; Wu et al., 2022).

### 2.5. Genomic DNA extraction

DNA source materials included venous blood samples from 10 BSB, 10 YT, 10 BY hybrids, and 10 backcross progeny. A volume of 0.5 mL of venous blood was drawn from the caudal vein using a disposable syringe containing acid-citrate dextrose (ACD) anticoagulant. Total DNA was extracted from blood samples using the TaKaRa MiniBEST Universal Genomic DNA Extraction Kit (Takara Biomedical Technology, Beijing, China), following the manufacturer's protocol. DNA samples were stored at −80 ℃.

### 2.6. Primer design and fragment amplification

The primers for specific amplification of 5S rDNA in cyprinid fish, which is relatively conserved, were designed with reference to a previous report (Qin et al., 2010). The primers for amplifying the conserved HMG-box region of the Sox gene were based on a previous report from our laboratory (Chen et al., 2009). The sequences of the 5S rDNA and Sox-specific primers are listed in Table S1. The amplification procedure and system referred to previous research (Hu et al., 2012). PCR amplification products were separated by electrophoresis on a 1.5% agarose gel. Bands containing the target fragments were precisely excised with a scalpel, and DNA fragments were purified using an Agarose Gel DNA Recovery Kit (Sangon Biotech, Shanghai). The purified fragments were ligated into the pMD−18-T vector (Takara Biomedical Technology, Beijing, China) at 4 ℃ for 24 h, then transformed into *E. coli* DH5α competent cells and plated for culture. For each target fragment sample, ten single colonies were selected for sequencing, which was performed by Sangon Biotech, Shanghai.

### 2.7. Mitochondrial DNA amplification

Based on the complete mitochondrial DNA sequences of BSB (EU.434747) and YT (GQ.289558) submitted in the NCBI database (https://www.ncbi.nlm.nih.gov/), and referring to previous research (Hu et al., 2012; Mao et al., 2019), 18 primer pairs were designed using Primer Premier 5.0 software to amplify the complete mitochondrial DNA sequence of the BY backcross progeny. The names and sequences of

the designed primers are listed in Table S2. Primer synthesis was completed by Sangon Biotech, Shanghai. Steps for amplification fragment recovery and purification were the same as in Section 2.6. Sequencing of the amplified fragments was performed by Tsingke Biotechnology Co., Beijing. For the obtained sequencing fragments, vector sequences were removed based on the designed primers. Referring to the existing complete mitochondrial DNA sequences of BSB and YT, all sequencing fragments were assembled and spliced using the CAP function of Mito Z (https://github.com/linzhi2013/MitoZ.). The results were visualized using Circos −0.69–9 software (https://circos.ca/).

### 2.8. Sequence alignment and phylogenetic analysis

The obtained 5S rDNA, *Sox9*, and mitochondrial sequences were checked manually to remove low-quality regions and primer sequences. Sequence alignment was performed using ClustalW implemented in MEGA 7.0. Sequence similarity among BSB, YT, BY, 2nBBY, and 3nBBY was calculated based on the aligned sequences. For *Sox9* and mitochondrial genome analyses, neighbor-joining (NJ) phylogenetic trees were constructed in MEGA 7.0 using the Kimura 2-parameter model. The reliability of each node was evaluated using 1000 bootstrap replicates. The final phylogenetic trees were edited and visualized for comparative analysis.

## 3. Results

### 3.1. Formation of backcross progeny

The formation process of the backcross progeny (BBY) is shown in Fig. 1. Previous research indicated that the gonad development of BY hybrids is relatively slow, with no fertile individuals found at 24 months of age (Hu et al., 2012). In this study, after 36 months of rearing, some male BY hybrids produced a small amount of watery milt after artificial induction, and a very few individuals produced faint white milt. Microscopic examination of the collected milt revealed a small number of normal sperm. During artificial fertilization, mature eggs from female BSB were mixed with preserved milt from male BY hybrids at a volume ratio of 1:0.5, gently stirred with feathers, and then spread into glass culture dishes for incubation. At 24℃, the first hatched fry were observed at 55 h post-fertilization, and hatching was completed by 72 h. A total of nine breeding experiments were conducted in 2023 and 2024 (Table 1). At water temperatures ranging from 22℃ to 25 ℃, the fertilization and hatching rates of BSB (♀) × BY (♂) hybrids were 3.70 ± 1.02% and 0.42 ± 0.14%, respectively, whereas those of the BSB (♀) × YT (♂) were 74.37 ± 9.74% and 50.66 ± 7.82%, respectively. These values differed significantly between the two crosses ($P < 0.05$).

### 3.2. DNA content and chromosome number of backcross progeny

The ploidy levels of the backcross progeny were determined by flow cytometry and chromosome counting. Flow cytometric analysis showed that the average DNA contents of BSB, YT, BY, and 2 nBBY were 67.48, 63.24, 67.75, and 66.80, respectively, whereas that of 3 nBBY was 101.21 (Fig. 2 and Table 2). These results indicated that 2nBBY was diploid, while 3nBBY was triploid.

Chromosome counting further confirmed this result (Fig. 3 and Table 3). The chromosome numbers of BSB, YT, BY, and 2nBBY were all 2n= 48, whereas 3nBBY had 3n= 72 chromosomes. These results demonstrated that the backcross of BSB (♀) × BY (♂) produced both diploid and triploid progeny.

**Table 1**
The fertilization rates and hatching rates of BY and BBY.

| Groups | Fertilization rate (%) | Hatching rate (%) |
|---|---|---|
| BY: BSB (♀) × YT (♂) | 74.37%±9.74%[a] | 50.66%±7.82%[a] |
| BBY: BSB (♀) × BY (♂) | 3.70%±1.02%[b] | 0.42%±0.14%[b] |

[a]and [b] in the same column means significant differences between different groups ($P < 0.05$). *For all the values, n = 9.*

### 3.3. Morphological characteristics of 2nBBY and 3nBBY

The external morphological characteristics of BSB, YT, BY hybrids, and the two types of backcross progeny (2nBBY and 3nBBY) are shown in Fig. 4. The morphological characteristics of BSB, YT, BY, 2nBBY, and 3nBBY were further compared using measurable and countable traits (Tables 4 and 5). For measurable traits, 2nBBY was more similar to maternal BSB but showed a significantly lower BL/BH ratio and a higher BH/HH ratio, indicating a higher body depth and a relatively smaller head. In contrast, 3nBBY exhibited an intermediate body shape between maternal BSB and paternal BY, with a body depth greater than that of BY. For countable traits, the numbers of lateral line scales, scales above and below the lateral line, dorsal fin rays, and abdominal fin rays in both 2nBBY and 3nBBY generally overlapped with or fell between those of BSB, YT, and BY. Among these traits, the number of anal fin rays was the most distinguishable character: 2nBBY was similar to BSB, whereas 3nBBY showed an intermediate pattern between BSB and BY/YT. Overall, these results indicate that the backcross progeny inherited morphological characteristics from both parental lineages, with 2nBBY showing closer similarity to BSB and 3nBBY displaying a more intermediate phenotype.

To further evaluate the growth-related traits and phenotypic uniformity of the backcross progeny, body weight, body length, and their coefficients of variation were compared among BSB, YT, BY, 2nBBY, and 3nBBY at 12 months of age (Table S3). The body weights of both backcross progeny were significantly higher than those of BSB, YT, and BY ($P < 0.05$). Among all groups, 3nBBY showed the highest body weight, followed by 2nBBY. In contrast, YT had the lowest body weight. For body length, 3nBBY and YT showed the highest values, followed by BY, 2nBBY, and BSB. The coefficients of variation for body weight in

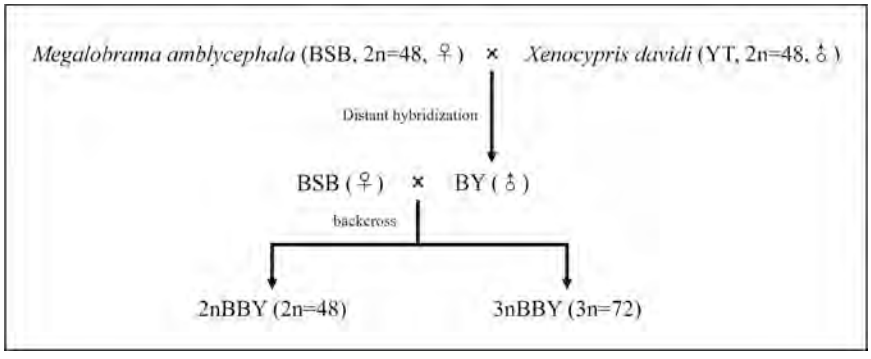


**Fig. 1.** The formation process of BY backcross offspring.

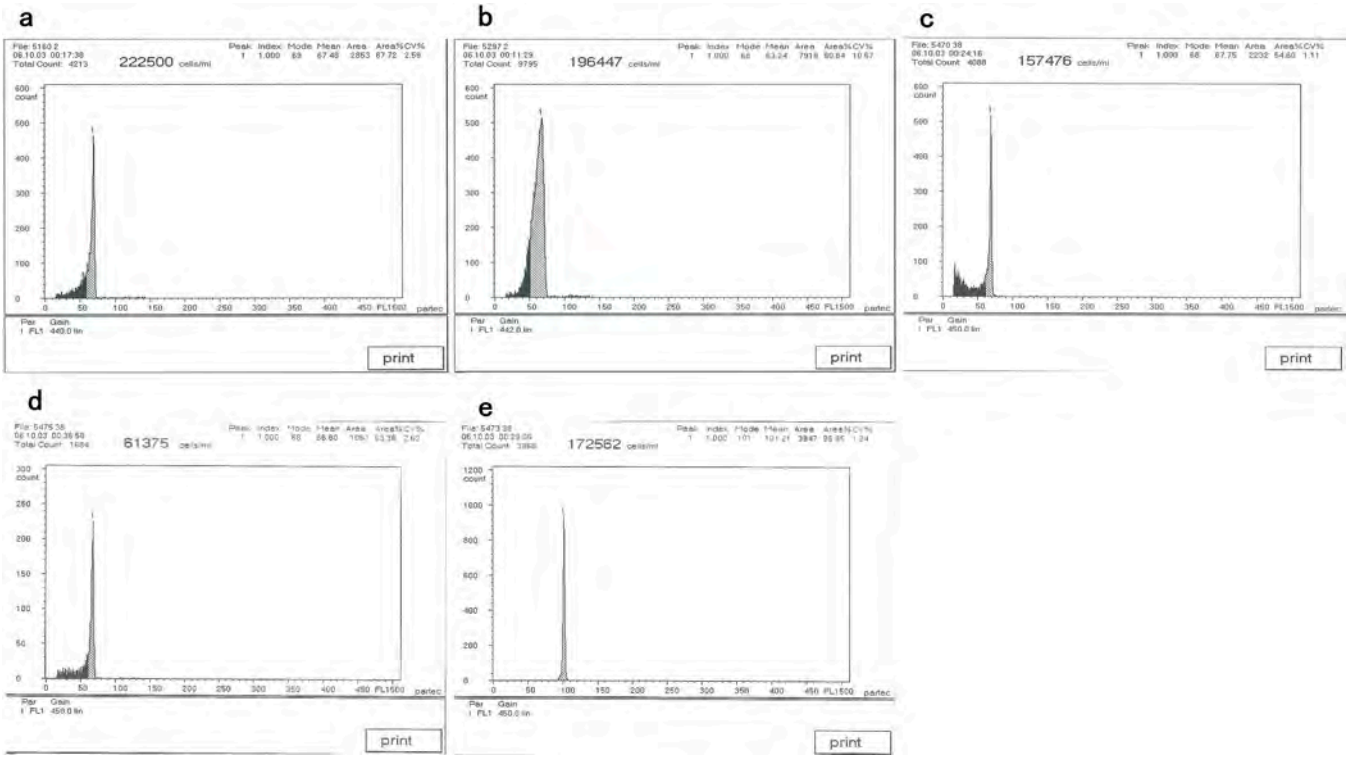


**Fig. 2.** Analysis of DNA content in blood cells of BSB, YT, BY and BY backcross offspring. a. Mean DNA content of BSB (peak: 67.48); b. Mean DNA content of YT (peak: 63.24); c. Mean DNA content of BY (peak: 67.75); d. Mean DNA content of 2 nBBY (peak: 66.80); e. Mean DNA content of 3nBBY (peak: 101.21).

**Table 2**
Comparison of DNA content in blood cells of BSB, YT, BY and BY backcross offspring.

| | Average content of DNA | Ratio | |
|---|---|---|---|
| | | Observed value | Predicted value |
| BSB | 67.48 | | |
| YT | 63.24 | | |
| BY | 67.75 | | |
| 2nBBY | 66.80 | 2nBBY/ (0.5 ×BSB+0.5 ×YT) = 1.02[a] | 1 |
| | | 2nBBY/ (0.5 ×BSB +0.5 ×BY) = 0.99[a] | 1 |
| 3nBBY | 101.21 | 3nBBY/ (0.5 ×BSB+YT) = 1.02[a] | 1 |
| | | 3nBBY/ (BSB+0.5 ×YT) = 1.04[a] | 1 |
| | | 3nBBY/ (0.5 ×BSB+BY) = 0.99[a] | 1 |
| | | 3nBBY/ (BSB+0.5 ×BY) = 0.99[a] | 1 |

[a] : There is no significant difference between the observed value and the predicted value ($P > 0.05$).

2nBBY and 3nBBY were 3.11% and 3.26%, respectively, which were lower than those of BSB, YT, and BY. The coefficients of variation for body length in the two backcross progeny were also low, indicating relatively high phenotypic uniformity.

Taken together, the backcross progeny exhibited several favorable morphological and growth-related traits. The 2nBBY showed a higher body depth and a relatively smaller head than maternal BSB, whereas 3nBBY displayed an intermediate body shape with improved body depth compared with paternal BY. In addition, both 2nBBY and 3nBBY showed significantly higher body weights than BSB, YT, and BY, with relatively low coefficients of variation.

### 3.4. Gonadal development of backcross progeny

Paraffin sectioning and HE staining were used to examine the gonadal development of the backcross progeny, with results shown in Fig. 5. At 12 months of age, the ovaries of 2nBBY were flesh-colored. Staining results showed the presence of numerous phase I and phase II oocytes, along with a small number of oogonia in the ovaries (Fig. 5b). The testes of 2nBBY were gray-white, and no milt could be extruded, Sections revealed a large number of spermatids within the seminiferous tubule structures of the testes (Fig. 5a). These results preliminarily indicate normal gonad development in the diploid 2nBBY backcross progeny. Compared to 2nBBY, the testicular development of 12-month-old 3nBBY was significantly delayed. Only a very small number of spermatogonia were observed in the testes, with no mature spermatids found (Fig. 5c), suggesting that 3nBBY may be sterile. Additionally, no female 3nBBY individuals were observed in the experiments. Therefore, the gonadal development and fertility of triploid backcross progeny require further study.

### 3.5. Genetic variation analysis of 5S rDNA in backcross progeny

The 5S rDNA fragments of BSB, YT, BY, 2nBBY, and 3nBBY were amplified, sequenced, and compared to investigate the genetic inheritance patterns of the backcross progeny. As shown in Fig. 6, two major bands of approximately 200-bp and 400-bp were amplified in all five groups. Sequence analysis revealed multiple 5S rDNA fragment types among the parental species, $F_1$ hybrids, and backcross progeny (Fig. 7).

For the approximately 200-bp fragments, the 188 bp fragment detected in both 2nBBY and 3nBBY was identical to that of maternal BSB, indicating maternal inheritance. In addition, paternal-derived fragments were also detected in the backcross progeny. The 210 bp fragment in 3nBBY was highly consistent with that of YT and BY, whereas the 215 bp fragment in 2nBBY showed sequence similarity to the YT-derived 220 bp fragment but contained several deletions. These results indicate that both 2nBBY and 3nBBY inherited 5S rDNA fragments from the original paternal YT lineage, although the inherited fragment types differed between the two backcross progeny (Figure S1 and S2).

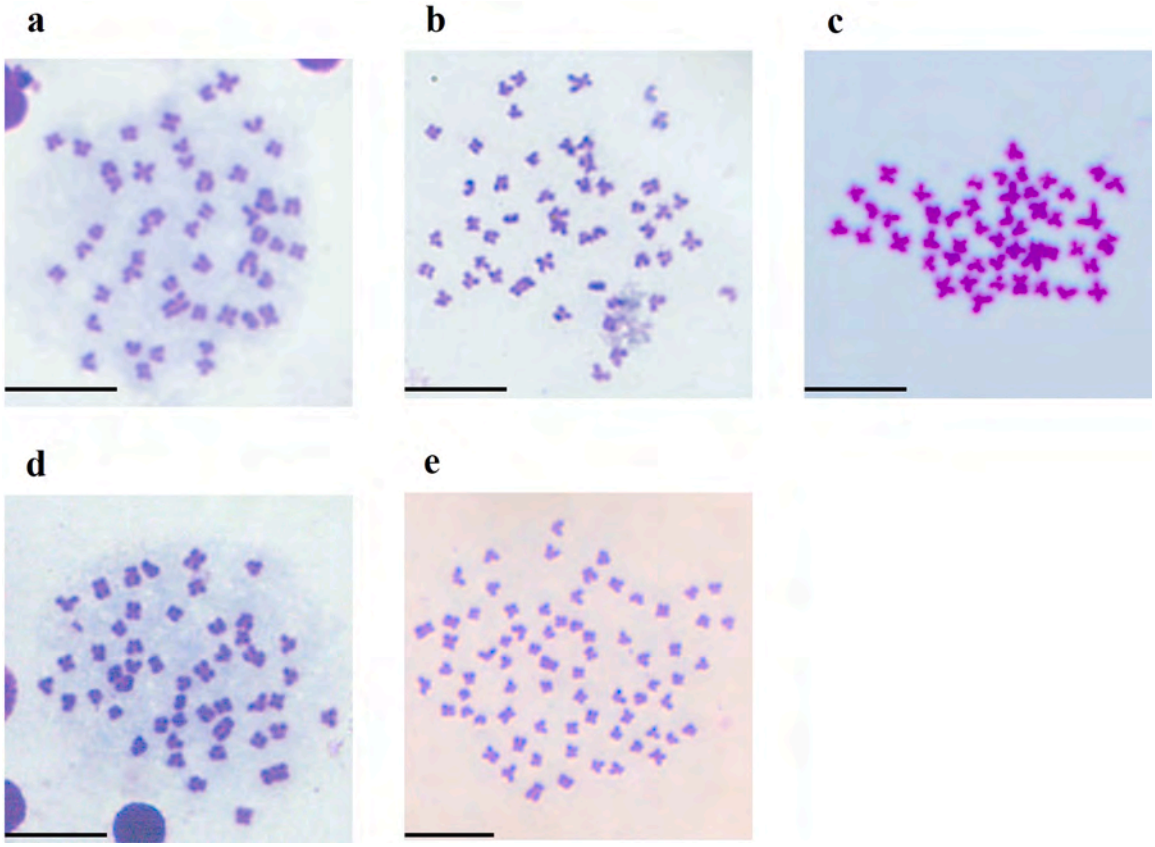


**Fig. 3.** Metaphase chromosomes of BSB, YT, BY and BY backcross offspring. a. Metaphase chromosomes of BSB (2 n = 48); b. Metaphase chromosomes of YT (2n=48); c. Metaphase chromosomes of BY (2n=48); d. Metaphase chromosomes of 2nBBY (2n=48); e. Metaphase chromosomes of 3 nBBY (3n=72). Bar = 5 μm.

**Table 3**
Distribution of metaphase chromosome numbers of BSB, YT, BY and BY backcross offspring.

| | Number of detections | Chromosome number distribution | | | |
|---|---|---|---|---|---|
| | | < 48 | 48 | < 72 | 72 |
| BSB | 200 | 29 | 170 | 1 | |
| YT | 200 | 20 | 180 | | |
| BY | 200 | 20 | 180 | | |
| 2nBBY | 200 | 18 | 182 | | |
| 3nBBY | 200 | | | 12 | 188 |

For the approximately 400-bp fragments, the 376 bp fragments detected in 2nBBY and 3nBBY were derived from maternal BSB and paternal YT (Figure S3). However, several base substitutions were observed in these fragments, suggesting that sequence variation occurred during distant hybridization and backcrossing. Overall, the 5S rDNA results demonstrated that the backcross progeny inherited genetic information from both BSB and YT lineages and exhibited sequence variation, including insertions, deletions, and substitutions.

### 3.6. Genetic variation analysis of the Sox9 gene in backcross progeny

The *Sox9* gene fragments of BSB, YT, BY, 2nBBY, and 3nBBY were amplified, sequenced, and compared (Fig. 8). The *Sox9* fragments of BSB and BY were 714 bp in length, whereas that of YT was 710 bp, with clear sequence differences between BSB and YT. The 2nBBY *Sox9* fragment was 714 bp and was highly similar to those of BSB and BY, suggesting that it was mainly inherited from the BSB lineage.

Two *Sox9* fragment types were detected in 3nBBY: *Sox9*-I, with a length of 714 bp, and *Sox9*-II, with a length of 709 bp. The *Sox9*-I fragment was closely related to the BSB-derived fragment, whereas *Sox9*-II showed high similarity to the YT fragment and contained YT-specific sequence characteristics. The NJ phylogenetic tree further confirmed this pattern: YT and 3nBBY *Sox9*-II clustered together, while BSB, BY, 2nBBY, and 3nBBY *Sox9*-I formed another clade (Fig. 9). These results indicate that the backcross progeny retained *Sox9* genetic information from both parental lineages, with paternal YT-derived components detected in 3nBBY.

### 3.7. Mitochondrial genetic analysis of backcross progeny

The complete mitochondrial genomes of 2nBBY and 3nBBY were obtained by sequencing and assembly of the amplified mitochondrial fragments. The mitochondrial genome of 2nBBY was 16,623 bp in length, whereas that of 3nBBY was 16,619 bp (Fig. 10). Both mitochondrial genomes contained the typical set of 13 protein-coding genes, 22 tRNA genes, and 2 rRNA genes, and the D-loop region was 937 bp in length in both backcross progeny. The detailed gene positions and lengths are listed in Table S4.

The mitochondrial genomes of 2 nBBY and 3nBBY were compared with those of BSB, YT, and BY. The 2nBBY mitochondrial genome showed 99.98%, 92.17%, and 100% similarity to BSB, YT, and BY, respectively. The 3nBBY mitochondrial genome showed 99.15%, 92.10%, and 99.16% similarity to BSB, YT, and BY, respectively. In the NJ phylogenetic tree (Fig. 11), BSB, BY, 2nBBY, and 3nBBY clustered together, whereas YT formed a separate clade. Within the BSB-related clade, 2nBBY was closest to BY, followed by BSB and 3nBBY. Overall, these results suggest that the mitochondrial genomes of both 2nBBY and 3nBBY were mainly inherited from the maternal BSB lineage, although the 3nBBY mitochondrial genome showed slight sequence variation compared with those of 2nBBY, BSB, and BY.

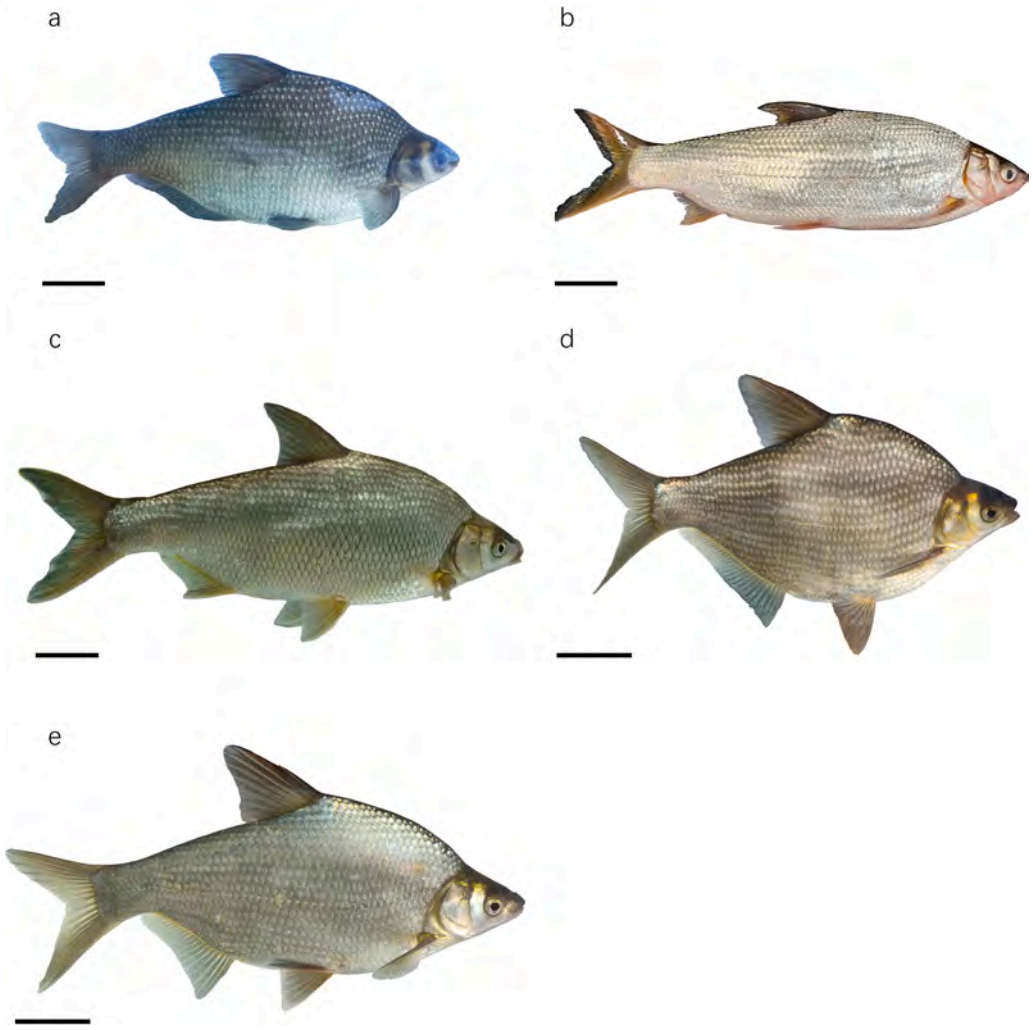


**Fig. 4.** Appearance of BSB, YT, BY and BY backcross offspring. a. Appearance of BSB; b. Appearance of YT; c. Appearance of BY; d. Appearance of 2nBBY; e. Appearance of 3nBBY. The scale bar is 5 cm.

**Table 4**
Comparison of measurable traits of BSB, YT, BY and BY backcross offspring.

| | TL/BL | BL/HL | BL/BH | HL/HH | BH/HH | CPL/CPH |
|---|---|---|---|---|---|---|
| BSB | 1.23 ± 0.02[a] | 4.50 ± 0.05[b] | 2.38 ± 0.02[d] | 1.26 ± 0.02[b] | 2.37 ± 0.02[b] | 1.05 ± 0.02[c] |
| YT | 1.24 ± 0.06[a] | 5.11 ± 0.03[a] | 3.72 ± 0.02[a] | 1.28 ± 0.02[b] | 1.75 ± 0.03[d] | 1.35 ± 0.03[a] |
| BY | 1.23 ± 0.02[a] | 4.91 ± 0.07[a] | 2.89 ± 0.02[b] | 1.23 ± 0.02[b] | 2.09 ± 0.03[c] | 1.41 ± 0.03[a] |
| 2nBBY | 1.18 ± 0.02[b] | 4.99 ± 0.05[a] | 2.03 ± 0.03[e] | 1.14 ± 0.02[c] | 2.81 ± 0.05[a] | 0.93 ± 0.02[d] |
| 3nBBY | 1.23 ± 0.02[a] | 4.36 ± 0.03[b] | 2.75 ± 0.02[c] | 1.34 ± 0.02[a] | 2.12 ± 0.04[c] | 1.16 ± 0.04[b] |

[a], [b], [c], [d], [e] in the same column means significant differences between different fish ($P < 0.05$).

## 4. Discussion

Although distant hybridization in fish can produce viable offspring, the fertility of $F_1$ hybrids from parents of different genetic distances varies significantly (Lou and Li, 2006; Liu, 2010). Hybridization between different species within the same genus often yields fertile hybrid offspring, as reported in genera such as *Labeo*, *Salmo*, *Oreochromis*, and *Epinephelus* (Wang et al., 2019b; Chen et al., 2023). Intergeneric hybridization presents various scenarios: some are fully fertile, like the hybrid between *Hypophthalmichthys molitrix* and *Aristichthys nobilis* (Mia et al., 2005), and the hybrid between *Cirrhinus molitorella* and *Sinilabeo decorus tungting* (Nichols) (Jinxia and Xiaofang, 1984); others are completely sterile, like intergeneric hybrids in salmonid fishes (Suzuki, 1973). Most inter-subfamilial hybrids are completely sterile, such as hybrids between *Ctenopharyngodon idella* and *M. terminalis* or BSB (Liu, 1987); a few are fertile, like the hybrid between *Cyprinus carpio* var. *singuonensis* and *C. idella* and the hybrid between *A. nobilis* and *C. idella* (Berry and Low, 1970; Wang et al., 2016). Interordinal hybridization has been reported, such as in BSB × *Siniperca chuatsi* (Wang and Yao, 2022a), but studies on gonadal development and fertility are lacking. Only about 40% of females and 4.7% of males in $F_1$ hybrids of *C. auratus* × *C. carpio* were fully fertile, with very low hatching and survival rates. Only after years of large-scale selective breeding were a small number of $F_2$ offspring obtained (Liu, 2010). Overall, in fish distant hybridization breeding, the transition from $F_1$ to $F_2$ represents the primary bottleneck in establishing hybrid lines. Fertile hybrid offspring facilitate line establishment, whereas it is more challenging for hybrids with poor or no fertility.

Previous research indicated that BY hybrids have advantages such as a fast growth rate and high meat yield. However, their gonadal development is asynchronous, with various gonad types present in the population, and no fertile offspring were found in two-year-old BY hybrids (Hu et al., 2012). In this study, breeding experiments with

**Table 5**
Comparison of countable traits among BSB, YT, BY and BY backcross offspring.

| | Lateral line scales | Scales above the lateral line | Scales below the lateral line | Dorsal fins | Abdominal fins | Anal fins |
|---|---|---|---|---|---|---|
| BSB | 52–57 | 11–14 | 8–11 | III + 7–8 | 9–10 | III + 23–31 |
| YT | 60–67 | 10–12 | 6–8 | III + 7–9 | 8–9 | III + 11–13 |
| BY | 55–66 | 11–13 | 8–11 | III + 7–9 | 8–10 | III + 15–18 |
| 2nBBY | 53–60 | 10–13 | 8–11 | III + 7–8 | 8–10 | III + 25–30 |
| 3nBBY | 54–58 | 10–13 | 8–10 | III + 7–8 | 8–10 | III + 17–21 |

The Roman numerals on the dorsal and anal fins mean the number of fin spines, and the Arabic numerals represent the number of fin rays.

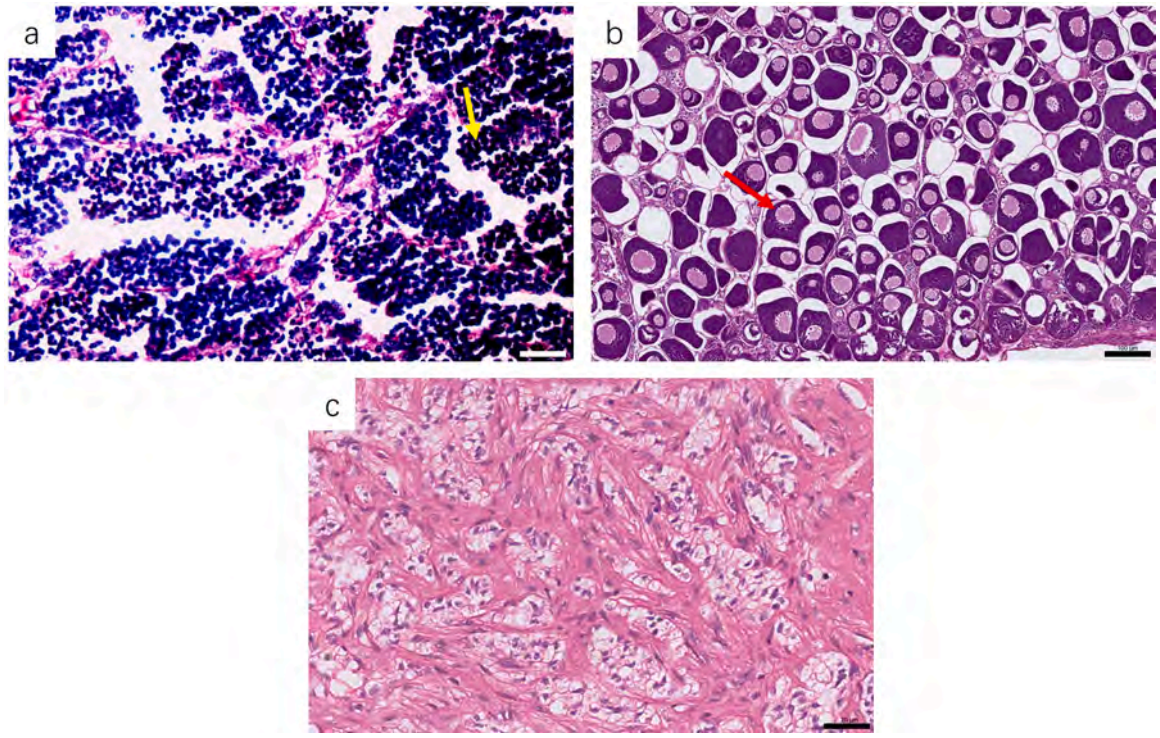


**Fig. 5.** Gonad structure of 12-month-old BY backcross offspring. a. Microstructure of testis tissue of 2nBBY, yellow arrows represent spermatids, scale bar is 20 μm; b. Microstructure of ovarian tissue of 2nBBY, red arrows represent oocytes in phase II, scale bar is 100 μm; c. Microstructure of testis tissue of 3nBBY, scale bar is 20 μm.

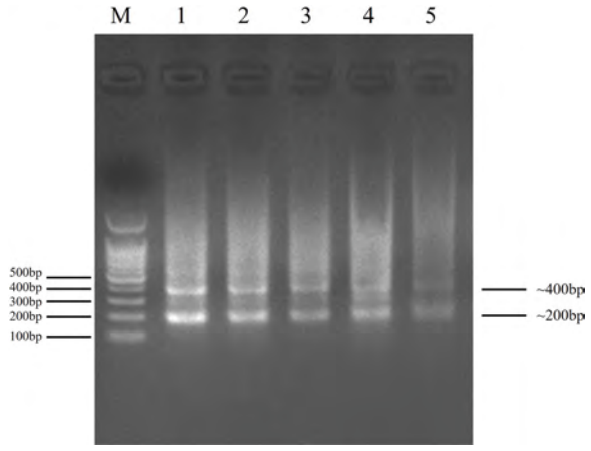


**Fig. 6.** Electrophoresis of amplified 5S rDNA. M. DNA ladder markers; 1. BSB; 2. BY; 3. 2nBBY; 4. 3nBBY; 5. YT. Each sample has two bands (~200 bp, ~400 bp).

three-year-old BY hybrids revealed that a small number of male individuals could produce watery or faint white milt, offering a possibility to break through the reproductive barrier of the $F_1$ generation in distant hybridization. Through multiple large-scale repeated experiments, fertilized eggs from the union of female BSB eggs and male BY hybrid sperm were successfully obtained. The transition from $F_1$ hybrids to subsequent generations is often constrained by reproductive barriers, including gametic incompatibility, abnormal gametogenesis, impaired fertilization, asynchronous embryonic development, and reduced larval survival (Liu et al., 2025). In the present study, the fertilization and hatching rates of BSB (♀) × BY (♂) were significantly lower than those of the original distant hybridization cross BSB (♀) × YT (♂). This result suggests that the reproductive performance of the backcross was mainly limited by the poor sperm quality of BY males. Only a few three-year-old BY males produced watery or faint white milt, and microscopic observation revealed only a small number of normal sperm. Because sperm motility and morphology are closely associated with semen quality and fertilizing capacity in fish, the abnormal sperm characteristics of BY males may have directly reduced fertilization success and subsequent hatching (Rurangwa et al., 2004). Similar reproductive bottlenecks have also been reported during the production of $F_2$ offspring from distant hybridization, such as *C. auratus* × *C. carpio* (Liu et al., 2001). Previous studies showed that only a few BY hybrid individuals produced sperm, which lacked normal flagellar structure (Hu et al., 2012). Sperm deformity directly leads to decreased sperm motility and fertilizing ability (Alavi and Cosson, 2005; Xiao-Gang and Jian, 2013). Therefore, it is hypothesized that poor sperm quality and sperm deformity in BY hybrids are major reasons for the low fertilization and hatching rates of

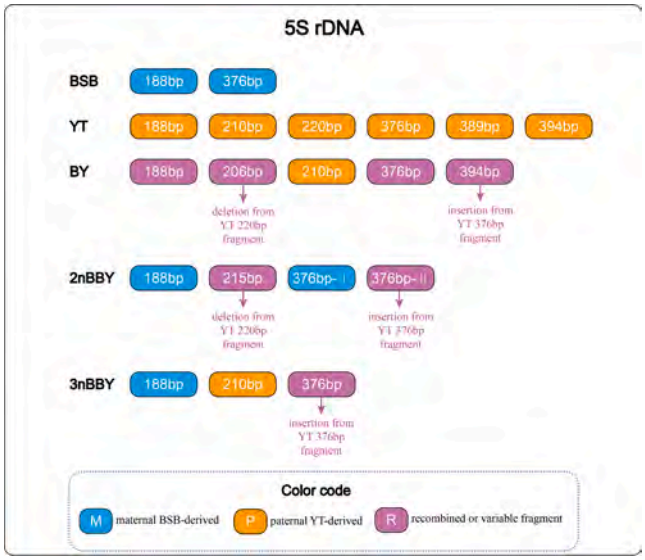


**Fig. 7.** Schematic summary of parental inheritance and sequence variation of 5S rDNA fragments in BSB, YT, BY, 2nBBY, and 3nBBY. The fragment types detected in each group are shown as horizontal blocks. Maternal BSB-derived fragments, paternal YT-derived fragments, and variable or recombined fragments are indicated separately.

the backcross progeny.

Both diploid and triploid individuals were found among the BBY. The DNA content of diploids showed no significant difference from maternal BSB, while the DNA content of triploids was equivalent to the sum of two sets of chromosomes from one parent and one set from the other. Chromosome analysis further confirmed their ploidy. When distant hybrid fish produce haploid gametes through meiosis, their union can form fertile diploid fish lines. When distant hybrid fish produce unreduced gametes, they can give rise to tetraploid fish (Liu, 2010). It has been found that distant hybrid fish can produce both diploid and triploid eggs. Fertilization of these with diploid and haploid sperm, respectively, can form fertile tetraploid fish lines (Hu et al., 2019). BSB has a chromosome number of 2n= 48, producing n = 24 eggs. The appearance of both 2nBBY and 3nBBY types in the backcross between BSB and BY hybrids suggests the presence of both normal meiotic gametes and some unreduced gametes in the sperm of BY hybrids.

Previous research indicated that the number of anal fin rays is the most distinctive feature distinguishing hybrid offspring from their parents (Hu et al., 2012). A similar situation was observed in this study, where the number of anal fin rays could clearly differentiate BSB, YT, 2nBBY, and 3nBBY. Regarding measurable traits, it is noteworthy that the BL/BH ratio of 2nBBY was significantly lower than other fish ($P < 0.05$), indicating the highest body depth, while its HL/HH ratio was significantly lower than other fish ($P < 0.05$), indicating a smaller head. The BL/BH ratio of 3nBBY was lower than the paternal BY hybrid but higher than the maternal BSB, and its BH/HH ratio was lower than the maternal BSB but higher than the paternal BY hybrid, indicating that 3nBBY acquired a higher body depth and smaller head compared to the paternal BY hybrid. The above results indicate that through distant hybridization and backcrossing, both 2nBBY and 3nBBY exhibit advantageous traits, such as smaller heads and higher body depth compared to the parents, suggesting a higher meat yield. The emergence of these advantageous traits may stem from genetic variation in the offspring's genome due to distant hybridization between BSB and YT, subsequently affecting the phenotype. It can also be inferred that 2nBBY has undergone genetic changes in other aspects. The superior morphological traits of the backcross progeny are one of the main highlights of this study. In aquaculture breeding, a higher body depth, relatively smaller head, and greater body weight are generally desirable because they may be associated with improved body shape and potential meat yield. In addition to morphological advantages such as increased body depth and a relatively small head, the backcross progeny also showed favorable growth-related performance, particularly in terms of body weight gain. Moreover, the coefficients of variation for body weight in 2nBBY and 3nBBY were lower than those of the parental and BY hybrid groups, suggesting that the backcross progeny exhibited relatively high population uniformity for this growth-related trait. These results indicate that the backcross progeny not only inherited morphological characteristics from both parental lineages but also displayed favorable traits for further selection. Therefore, 2nBBY and 3nBBY may serve as valuable germplasm resources for the genetic improvement of BSB.

5S rDNA is composed of a 120-bp highly conserved coding sequence (encoding 5S rRNA) and variable non-transcribed spacer (NTS) sequences arranged in tandem repeat units. The 5S rRNA coding region is highly conserved, but the NTS region sequences are variable, often exhibiting base changes such as insertions and deletions, thus serving as species-specific and population-specific molecular markers (Campo et al., 2009; Úbeda-Manzanaro et al., 2010). Since clear base differences exist in the 5S rDNA sequences of BSB and YT, they were used in this study to analyze the genetic composition of the backcross progeny. The results showed that both types of backcross progeny inherited 5S rDNA sequences from both BSB and YT. The 2nBBY inherited the 188 bp and 376 bp fragments from BSB and the 220 bp fragment from YT; whereas the 3nBBY inherited the 188 bp and 376 bp fragments from BSB and the 210 bp fragment from YT. The results also showed insertions, deletions, and base substitutions in different fragments. In the $F_1$ hybrids of *C. carpio* var. *qingtianensis* (♀) × BSB (♂), four types of 5S rDNA fragments were found, among which the 186 bp fragment was inherited from the paternal BSB, and base variations were present in the NTS regions of the remaining fragments (Li, 2023). Similar findings were reported in the $F_1$ hybrids of *H. nobilis* (♀) × BSB(♂) (Wang et al., 2022b). This study further demonstrates that such variations can be inherited in the backcross progeny of hybrid fish and can undergo further changes. The recombination of genetic material in distant hybrid offspring is crucial for the formation of hybrid lines and molecular evolution, providing the potential for hybrid offspring to adapt to various environments (Wang et al., 2015).

The Sox-HMG DNA sequence can serve as a specific molecular marker among different species of cyprinid fish, significantly impacting studies on species evolution and genetic relationships (Chen et al., 2009). BSB and YT belong to different subfamilies within Cyprinidae, and their *Sox9* sequences exhibit considerable base differences. Through cloning, sequencing, and analysis of the *Sox9* sequences of BSB, YT, BY hybrids, and their backcross progeny, this study demonstrated the heterozygosity of genetic information in the backcross progeny genome and also identified base substitution phenomena in the BSB *Sox9* sequence within the backcross progeny.

Analysis of 5S rDNA and *Sox9* gene sequences indicated that both backcross progeny types inherited genetic information from the original maternal BSB and the original paternal YT, with partial recombination between homologous genes forming new heterozygous genomes. The integration and exchange between parental genomes in distant hybridization can lead to changes in gene expression levels, further resulting in phenotypic changes, which is an important basis for heterosis in hybrid offspring (Liu et al., 2001). During the establishment of the BSB × *Culter alburnus* ($F_1$–$F_6$), genetic information exhibited gene loss and chimerism, with some chimeric genes appearing in the $F_1$ hybrid and being heritable (Wu et al., 2019). Similarly, this study found that the backcross progeny stably inherited some genetic material from YT, while also revealing that the genetic information of the backcross progeny was not identical to that of the BY hybrid, indicating continuous fusion and adjustment between heterologous genomes during the continuation of distant hybrid offspring to reach a balance. Studies on the gonadal development of backcross progeny showed that diploid backcross progeny had normal gonad development compared to BY hybrids, possibly due to the gradual




**Fig. 8.** Comparison of *Sox9* gene fragment sequences among BSB, YT, BY and BY backcross offspring. The red box indicates the specific base fragments present in both YT and 3nBBY; I and II refer to two different *Sox9* gene fragments in 3nBBY.

stabilization of heterologous gene fusion in the backcross progeny. Concurrently, some paternal genetic information was lost, possibly due to the failure of gametes carrying specific genes to fertilize successfully during meiosis in gamete formation.

Animal mitochondrial DNA typically exhibits maternal inheritance. However, during fish distant hybridization, it has been found that mitochondrial DNA does not strictly follow maternal inheritance, showing evidence of paternal leakage (Mastrantonio et al., 2019; Wang et al., 2020, 2021; Qi et al., 2024). In the present study, the mitochondrial genomes of both 2 nBBY and 3nBBY showed much higher similarity to BSB than to YT, indicating that the mitochondria of the backcross progeny were mainly inherited from the maternal BSB lineage. Nevertheless, the mitochondrial genome of 3nBBY showed a slightly lower similarity to BSB than that of 2 nBBY. Because 3nBBY may have been produced by the fertilization of a haploid BSB egg with an unreduced diploid sperm from the BY male, its nuclear genome may

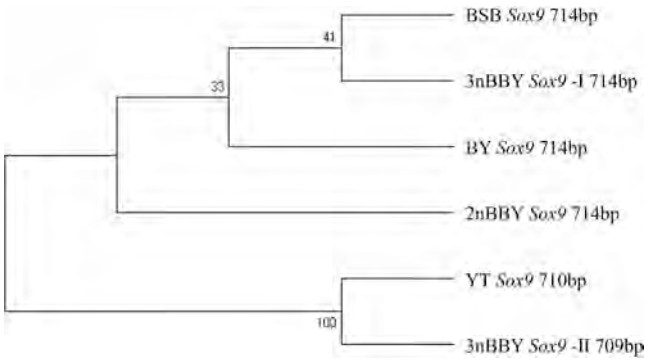


**Fig. 9.** NJ phylogenetic tree constructed based on *Sox9* gene fragments.

contain a relatively high proportion of paternal hybrid genomic components. Such a genomic background may be associated with mitochondrial sequence variation or cytonuclear interaction during early development (Morgan et al., 2013). Although paternal mitochondrial leakage has been reported in some fish hybrids, the current data are insufficient to directly confirm paternal leakage in 3nBBY. Therefore, we have considered paternal leakage only as a possible explanation that requires further validation using additional individuals, paternal-specific mitochondrial sites, and heteroplasmy-sensitive sequencing methods.

Preliminary investigation into the genetics and variation of the two backcross progeny types using three molecular markers (5S rDNA, *Sox9*, and mitochondrial genome) revealed that the backcross progeny not only inherited genetic information from the original maternal BSB and the original paternal YT but also underwent novel integration and variation.

The two new types of backcross progeny are expected to serve as new germplasm resources for BSB improvement and provide references for genetic studies on distant hybridization in fish.

## Author contributions

This study was conceived and designed by by S.Y.F., M.T., M.M. and S.J.L. Most statistical analyses and write the manuscript by S.Y.F., Y.J.H., X.C., Experimental work: S.Y.F., Y.J.H., X.C., B.W., Z.Z., Z.T., X.X.Y., and F.X.Y. Chart production: S.Y.F. Feeding of experimental fish: S.Y.F. Manuscript modify: M.T., S.J.L. and M.M. All authors read and approve the final manuscript.

## CRediT authorship contribution statement

**Yujie Huang:** Methodology, Investigation, Formal analysis, Data curation. **Siyu Fan:** Writing – original draft, Methodology, Formal analysis, Data curation, Conceptualization. **Xin Chen:** Visualization, Validation, Methodology, Formal analysis. **Min Tao:** Writing – review &

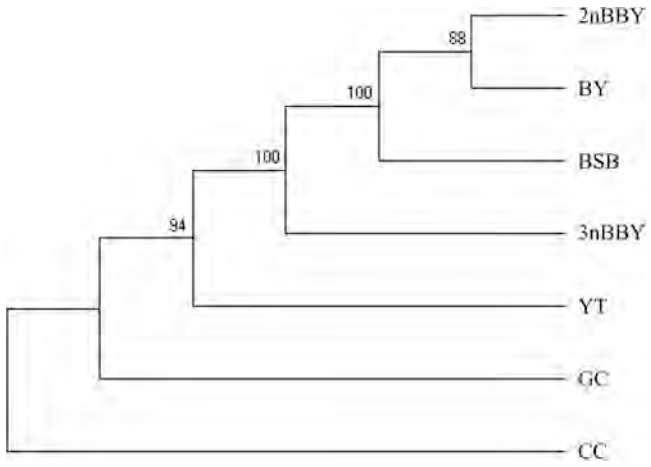


**Fig. 11.** NJ phylogenetic tree of mitochondrial genome. GC means grass carp mitochondrial genome (MG827396.1), and CC means common carp mitochondrial genome (MN544290.1).

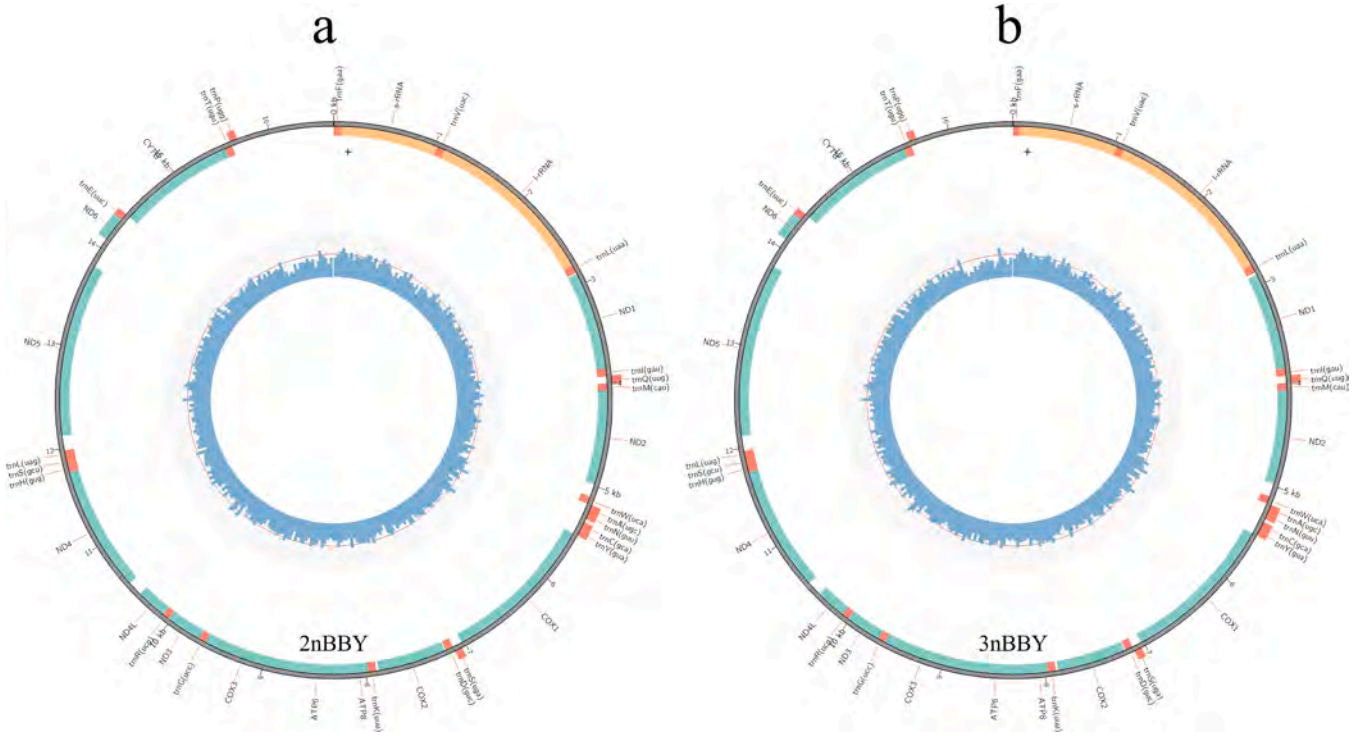


**Fig. 10.** Circle diagram of mitochondrial genome of 2nBBY and 3nBBY.

editing, Supervision, Conceptualization. **Faxian Yu:** Software, Methodology, Investigation. **Shaojun Liu:** Writing – review & editing, Supervision, Conceptualization. **Ming Ma:** Writing – review & editing, Supervision. **Zhifeng Zhou:** Visualization, Software, Methodology. **Bin Wu:** Visualization, Validation, Software. **Xinxin Yu:** Methodology, Investigation, Data curation. **Zhong Tang:** Software, Data curation.

## Declaration of Competing Interest

The authors declare that they have no known competing financial interests or personal relationships that could have appeared to influence the work reported in this paper.

## Acknowledgments

This work was supported by the Earmarked Fund for China Agriculture Research System (CARS-45), the Yuelushan Laboratory Breeding Program (Grant No. YLS-2025-ZY01011), the National Natural Science Foundation of China (Grant No. 32293252, 32293253), and The Science and Technology Innovation Program of Hunan Province (Grant No. 2023RC1053).

## Appendix A. Supporting information

Supplementary data associated with this article can be found in the online version at doi:10.1016/j.aqrep.2026.103776.

## Data availability

The data that has been used is confidential.

## References

Alavi, S.M.H., Cosson, J., 2005. Sperm motility in fishes. I. Effects of temperature and pH: a review. Cell. Biol. Int. 29 (2), 101–110.
Berry, P.Y., Low, M.P., 1970. Comparative studies on some aspects of the morphology and histology of *Ctenopharyngodon idellus*, *Aristichthys nobilis*, and their hybrid (Cyprinidae). Copeia 708–726.
Boore, J.L., 1999. Animal mitochondrial genomes. Nucleic Acids Res. 27 (8), 1767–1780.
Bowles, J., Schepers, G., et al., 2000. Phylogeny of the SOX family of developmental transcription factors based on sequence and structural indicators. Dev. Biol. 227 (2), 239–255.
Campo, D., Machado-Schiaffino, G., et al., 2009. Molecular organization and evolution of 5S rDNA in the genus *Merluccius* and their phylogenetic implications. J. Mol. Evol. 68, 208–216.
Chen, L., Li, W., et al., 2009. Novel genetic markers derived from the DNA fragments of Sox genes. Mol. Cell. probes 23 (3-4), 157–165.
Chen, S., Tian, Y., et al., 2023. Heterosis in growth and low temperature tolerance in Jinhu grouper (*Epinephelus fuscoguttatus* ♀ × *Epinephelus tukula* ♂). Aquaculture 562, 738751.
Foster, J.W., Graves, J.A., 1994. An SRY-related sequence on the marsupial X chromosome: implications for the evolution of the mammalian testis-determining gene. Proc. Natl. Acad. Sci. 91 (5), 1927–1931.
Gao, F., Lu, W., et al., 2021. Transcriptome profiling revealed the growth superiority of hybrid pufferfish derived from *Takifugu obscurus* ♀ × *Takifugu rubripes* ♂. Comparat. Biochem. Physiol. Part D Genomics Proteomics 40, 100912.
Gharib, S., 1998. Cross-breeding experiments on some important fishes of family Cichlidae (genus *Oreochromis*) and evaluation of their hybrids. Egypt. J. Aquat. Biol. Fish. 2 (3), 43–61.
Grosschedl, R., Giese, K., et al., 1994. HMG domain proteins: architectural elements in the assembly of nucleoprotein structures. Trends Genet. 10 (3), 94–100.
Gubbay, J., Collignon, J., et al., 1990. A gene mapping to the sex-determining region of the mouse Y chromosome is a member of a novel family of embryonically expressed genes. Nature 346 (6281), 245–250.
Guo, D., Liu, F., et al., 2022. Establishment of diploid hybrid strains derived from female *Larimichthys crocea* × male *Larimichthys polyactis* and transmission of parental mtDNA in hybrid progenies. Aquaculture 561, 738693.
Hu, F., Fan, J., et al., 2019. The sterility of allotriploid fish and fertility of female autotriploid fish. Front. Genet. 10.
Hu, J., Liu, S., et al., 2012. Characteristics of diploid and triploid hybrids derived from female *Megalobrama amblycephala* Yih × male *Xenocypris davidi* Bleeker. Aquaculture 364-365, 157–164.
Huang, W., Liu, Q., et al., 2016. Characterization of triploid hybrid groupers from interspecies hybridization (*Epinephelus coioides* ♀ × *Epinephelus lanceolatus* ♂). Aquac. Res. 47 (7), 2195–2204.
Jinxia, Z., Xiaofang, L., et al., 1984. A comparative study on the karyotypes among the hybrid fish (*Sinilabeo decorus* Tung-ting ♂ × *Cirrhinus molitorella* ♀) and its parental fishes. Acta Hydrobiol. Sin. 8 (3), 313–321.
Kirkpatrick, L. and B. Feeney (2011). *A Simple Guide to IBM SPSS for Versions 18.0 & 19.0*, Cengage Learning.
Kolar, C.S., Chapman, D.C., et al., 2005. Asian carps genus Hypophthalmichthys (Pisces Cyprinidae)–a Biol. Synop. Environ. risk Assess.
Lamer, J.T., Dolan, C.R., et al., 2010. Introgressive hybridization between bighead carp and silver carp in the Mississippi and Illinois Rivers. North. Am. J. Fish. Manag. 30.
Laudet, V., Stehelin, D., et al., 1993. Ancestry and diversity of the HMG box superfamily. Nucleic Acids Res. 21 (10), 2493–2501.
Li, Z.L., 2023. The analysis on geometric morphology and genetic of hybrids between *Cyprinus carpio* var. *qingtianensis* and blunt snout bream (Master's thesis). Shanghai Ocean University.
Lilyestrom, C.G., Wolters, W.R., et al., 1999. Growth, carcass traits, and oxygen tolerance of diploid and triploid catfish hybrids. North. Am. J. Aquac. 61 (4), 293–303.
Liu, S.Y., 1987. Cytogenetic studies on triploid *Ctenopharyngodon idella* × *Megalobrama amblycephala* hybrid and its parents [in Chinese]. Acta Hydrobiol. Sin. 01, 52–58.
Liu, S., 2010. Distant hybridization leads to different ploidy fishes. Sci. China Life Sci. 53 (4), 416–425.
Liu, S., Liu, Y., et al., 2001. The formation of tetraploid stocks of red crucian carp × common carp hybrids as an effect of interspecific hybridization. Aquaculture 192 (2), 171–186.
Liu, S., Luo, J., et al., 2016. Genomic incompatibilities in the diploid and tetraploid offspring of the goldfish × common carp cross. Proc. Natl. Acad. Sci. USA 113 (5), 1327–1332.
Liu, Q., Qi, Y., et al., 2018. The chimeric genes in the hybrid lineage of *Carassius auratus cuvieri* (♀) × *Carassius auratus* red var. (♂). Sci. China Life Sci. 61 (9), 1079–1089.
Liu, S., Qin, Q., et al., 2007. The formation of the polyploid hybrids from different subfamily fish crossings and its evolutionary significance. Genetics 176 (2), 1023–1034.
Liu, Q., Wang, S., Tang, C., Tao, M., Zhang, C., Zhou, Y., et al., 2025. The research advances in distant hybridization and gynogenesis in fish. Rev. Aquac. 17, e12972.
Lou, Y.D., Li, X.Q., 2006. Distant hybridization of fish and its application in aquaculture in China. J. Fish. Sci. China 13 (1), 151–158.
Luin, M., Ching, Fui, et al., 2013. Sexual maturation and gonad development in tiger grouper (*Epinephelus fuscoguttatus*) × giant grouper (*E. lanceolatus*) hybrid. J. Aquac. Res. Dev. 5 (2), 213.
Mao, Z., Fu, Y., et al., 2019. Evidence for paternal DNA transmission to gynogenetic grass carp. BMC Genet. 20 (1).
Mastrantonio, V., Urbanelli, S., et al., 2019. Ancient hybridization and mtDNA introgression behind current paternal leakage and heteroplasmy in hybrid zones. Sci. Rep. 9 (1), 19177.
Mia, M.Y., Taggart, J.B., et al., 2005. Detection of hybridization between Chinese carp species (*Hypophthalmichthys molitrix* and *Aristichthys nobilis*) in hatchery broodstock in Bangladesh, using DNA microsatellite loci. Aquaculture 247 (1-4), 267–273.
Moran, P., Pendas, A.M., et al., 1995. Applications of 5S rDNA in *Atlantic salmon*, *brown trout*, and in Atlantic salmon × brown trout hybrid identification. Mol. Ecol. 4 (2), 275–616.
Morgan, J.A.T., Macbeth, M., Broderick, D., et al., 2013. Hybridisation, paternal leakage and mitochondrial DNA linearization in three anomalous fish (Scombridae). Mitochondrion 13 (6), 852–861.
Nazar, R.N., Sitz, T.O., et al., 1976. Sequence homologies in mammalian 5.8S ribosomal RNA. Biochemistry 15 (3), 505–508.
Paques, F., Samson, M.L., et al., 1995. Structural evolution of the *Drosophila* 5S ribosomal genes. J. Mol. Evol. 41 (5), 615–621.
Qi, Z., Shi, J., et al., 2024. Paternal Mitochondrial DNA Leakage in Natural Populations of Large-Scale Loach, *Paramisgurnus dabryanus*. Biology 13 (8), 604.
Qin, Q., He, W., et al., 2010. Analysis of 5S rDNA organization and variation in polyploid hybrids from crosses of different fish subfamilies. J. Exp. Zool. Part. B Mol. Dev. Evol. 314B (5), 403–411.
Rurangwa, E., Kime, D.E., Ollevier, F., Nash, J.P., 2004. The measurement of sperm motility and factors affecting sperm quality in cultured fish. Aquaculture 234, 1–28.
Saad, Y.M., 2019. Analysis of 16S mitochondrial ribosomal DNA sequence variations and phylogenetic relations among some Serranidae fishes. South. Afr. J. Anim. Sci. 49 (1), 80–89.
Sinclair, A.H., Berta, P., et al., 1990. A gene from the human sex-determining region encodes a protein with homology to a conserved DNA-binding motif. Nature 346 (6281), 240–244.
Suzuki, R., 1973. Sexual maturity of F1 hybrids among salmonid fishes. Bull. Freshw. Fish. Res. Lab. 23, 57–74.
Úbeda-Manzanaro, M., Merlo, M.A., et al., 2010. Sequence characterization and phylogenetic analysis of the 5S ribosomal DNA in species of the family Batrachoididae. Genome 53 (9), 723–730.
Vergara-Chen, C., Aguirre, W.E., et al., 2009. A mitochondrial DNA based phylogeny of weakfish species of the *Cynoscion* group (Pisces: Sciaenidae). Mol. Phylogenetics Evol. 53 (2), 602–607.
Wang, J., Gaughan, S., et al., 2019a. Resolving the Genetic Paradox of Invasions: Preadapted Genomes and Postintroduction Hybridization of Bigheaded Carps in the Mississippi River Basin. Evolut. Appl. 13, 263–277.
Wang, S., Jiao, N., et al., 2020. Evidence for the paternal mitochondrial DNA in the crucian carp-like fish lineage with hybrid origin. Sci. China Life Sci. 63 (1), 102–115.
Wang, Y., Luo, Y., et al., 2022b. Production of a diploid hybrid with fast growth performance derived from the distant hybridization of *Hypophthalmichthys nobilis* (female) × *Megalobrama amblycephala* (male). Reprod. Breed. 2 (2), 56–64.

Wang, Y., Sun, W., et al., 2021. Variations in the mitochondrial genome of a goldfish-like hybrid [Koi carp (♀) × blunt snout bream (♂)] indicate paternal leakage. Front. Genet. 11, 613520.
Wang, S., Tang, C., et al., 2019b. Establishment and application of distant hybridization technology in fish. Sci. China Life Sci. 62 (1), 22–45.
Wang, J., Xiao, J., et al., 2015. Genomic variation in the hybrids of white crucian carp and red crucian carp: evidence from ribosomal DNA. Sci. China Life Sci. 58 (6), 590–601.
Wang, Y., Yang, C., et al., 2018. The formation of the goldfish-like fish derived from hybridization of female Koi Carp × male blunt snout bream. Front. Genet. 9.
Wang, Y., Yao, J., et al., 2022a. The formation of hybrid fish derived from hybridization of *Megalobrama amblycephala* (♀) × *Siniperca chuatsi* (♂). Aquaculture 548, 737547.
Wang, S., Ye, X., et al., 2017. A new type of homodiploid fish derived from the interspecific hybridization of female common carp × male blunt snout bream. Sci. Rep. 7 (1).
Wang, J., Zou, L., et al., 2016. The complete mitochondrial genome of the hybrid *Cyprinus capio* Furong [ *Cyprinus carpio* L. mirror (♀) × *Cyprinus carpio* var. *singuonensis* (♂)]. Mitochondrial DNA Part. B 1 (1), 428–429.
Wu, C., Chen, Q., et al., 2019. Genomic and epigenetic alterations in diploid gynogenetic hybrid fish. Aquaculture 512, 734383.
Wu, C., Li, J., et al., 2022. A new type of hybrid golden pompano "Chenhai No.1" produced by the hybridization of (*Trachinotus ovatus* ♀ × *Trachinotus blochii* ♂) ♀ × *T. ovatus* ♂. Reprod. Breed. 2 (3), 78–82.
Xiao, J., Kang, X., et al., 2014. The fertility of the hybrid lineage derived from female *Megalobrama amblycephala* × male *Culter alburnus*. Anim. Reprod. Sci. 151 (1-2), 61–70.
Xiao, L., Wang, D., et al., 2019. Comparative transcriptome analysis of diploid and triploid hybrid groupers (*Epinephelus coioides* ♀ × *E. lanceolatus* ♂) reveals the mechanism of abnormal gonadal development in triploid hybrids. Genomics.
Xiao-Gang, W., Jian, L., et al., 2013. Investigation of spermatozoa motility of *Epinephelus malabaricus* and comparison of the spermatozoa ultrastructure before and after ultra-low temperature freeze. Mar. Sci. 37 (2), 70–75.
Yang, Y., Wang, T., et al., 2021. First construction of interspecific backcross grouper and genome-wide identification of their genetic variants associated with early growth. Aquaculture 545, 737221.
Zhang, Z., Chen, J., et al., 2014. Research advances in animal distant hybridization. Sci. China Life Sci. 57 (9), 889–902.
Zhong, H., Chen, H., et al., 2024. Improved traits of proximate composition, liver antioxidant capacity and feeding habits in diploid hybrids from female *Micropterus salmoides* × male *Lepomis cyanellus*. Aquaculture 587.
Zhou, J., Ye, Y., et al., 2005. Genetic discrimination for three gynogenetic clones of silver carp *Hypophthalmichthys molitrix*, based on restriction endonuclease analysis of Nd5-Nd6 region of mitochondrial DNA. Chin. J. Oceanol. Limnol. 23 (1), 126–128.
Zou, S.P. and Y.L. Fang, et al. (2008). Measurement of characters. Inspection of germplasm for cultured fishes, Part 3. 18654: 3-2008.